MATERIAL NUMBER	# OF COLUMNS	# OF DIFF PAIR	DIM "A" MAX	DIM "B"	PTHØ
76860-3006	6	18	20.25	10.00	0.46±0.05
76860-3036	6	18	20.25	10.00	0.39±0.05
76860-3008	8	24	24.30	14.05	0.46±0.05
76860-3038	8	24	24.30	14.05	0.39±0.05

76860-*0**

MODULE & TAIL PLATING TYPE
3 = LEFT GUIDED, LEAD-FREE

# OF COLUMNS
06 = 6 COL 0.46 PTH
36 = 6 COL 0.39 PTH
08 = 8 COL 0.46 PTH
38 = 8 COL 0.39 PTH

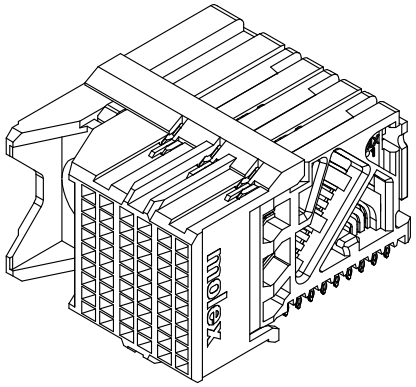

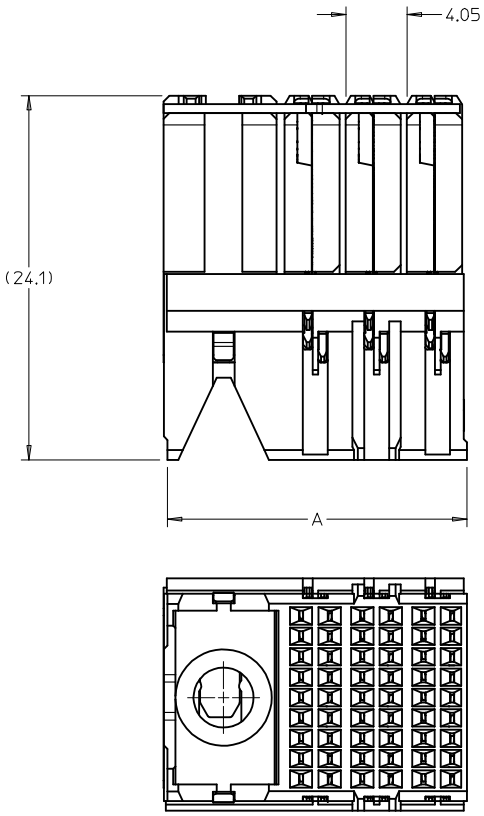

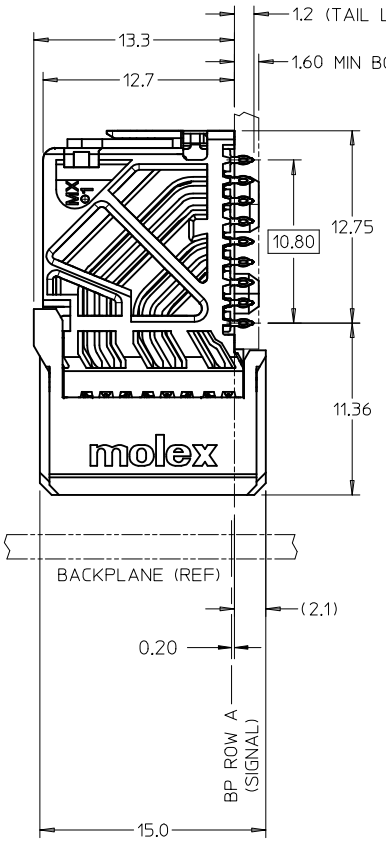

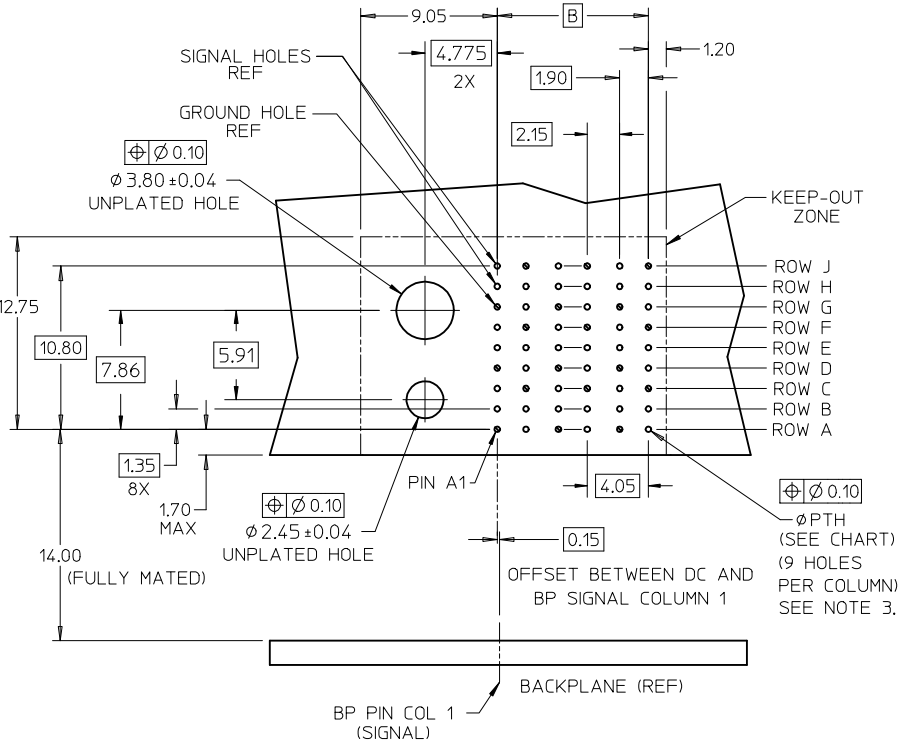

DAUGHTERCARD HOLE PATTERN
(CONNECTOR SIDE)

NOTES:
1. MATERIALS: HOUSING - LIQUID CRYSTAL POLYMER (LCP), GLASS-FILLED, UL94V-0
   TERMINALS - HIGH PERFORMANCE COPPER ALLOY
2. FINISH: 30uIN MIN GOLD IN CONTACT AREA. SELECTIVE TIN ON PCB TAILS. NICKEL OVERALL.
3. REFER TO MOLEX PRODUCT SPEC PS-76060-999 FOR PERFORMANCE SPECIFICATIONS AND ADDITIONAL PCB INFORMATION.
4. EACH SIGNAL WAFER CONTAINS 2 COLUMNS OF TERMINALS.
5. PRODUCT IS PACKAGED PER PK-70873-591.
6. THIS PART CONFORMS TO CLASS B REQUIREMENTS OF COSMETIC SPEC PS-45499-002.
7. REFER TO MOLEX SALES DRAWING SD-76855-002 FOR THE MATING HEADERS.
8. WHEN USING MOLEX SUPPLIED #2-32 SCREW 73726-4000 (4.31mm ±0.38 THREADABLE SCREW LENGTH), THE MAXIMUM BOARD THICKNESS IS 2.4mm.
9. REFER TO MOLEX ROUTING GUIDE AS-76850-990 FOR ADDITIONAL PCB LAYOUT AND ROUTING RECOMMENDATIONS.

REMOVE TIN-LEAD REF
EC NO: UCP2015-5541 2015/06/30
DRWN:BJMILLER 2015/07/07
CH'KD:
APPR:TELO
DESCRIPTION
B2
REV

QUALITY SYMBOLS
▼=0
▽=0

GENERAL TOLERANCES (UNLESS SPECIFIED)	mm	INCH
4 PLACES	± ---	± ---
3 PLACES	± ---	± ---
2 PLACES	± 0.15	± ---
1 PLACE	± 0.25	± ---
ANGULAR ±1/2°		

DRAFT WHERE APPLICABLE MUST REMAIN WITHIN DIMENSIONS

DIMENSION STYLE: MM ONLY
SCALE: 4:1
DESIGN UNITS: METRIC
THIRD ANGLE PROJECTION

		DATE
DRAWN BY	JLAURX	5/5/09
CHECKED BY	TELO	2010/01/13
APPROVED BY	JBINGHAM	2010/01/14

MATERIAL NO.: SEE CHART

TITLE: IMPACT DAUGHTERCARD 3 PAIR ORTHOGONAL GUIDE LEFT SALES DWG

molex MOLEX INCORPORATED

DOCUMENT NO.: SD-76860-002
SHEET NO.: 1 OF 1

SIZE: C

THIS DRAWING CONTAINS INFORMATION THAT IS PROPRIETARY TO MOLEX INCORPORATED AND SHOULD NOT BE USED WITHOUT WRITTEN PERMISSION